technical S.r.l.

Via Toscana, 9
20060 Vignate (MI) - Italy
Tel. +39-02-95.36.12.40
Fax +39-02-95.60.273
E-mail: sales@technical.it
www.technical.it

SAFETY VALVES

SV 10001 SERIES

USE AND MAINTENANCE MANUAL

We reserve to modify our production without previous communication.

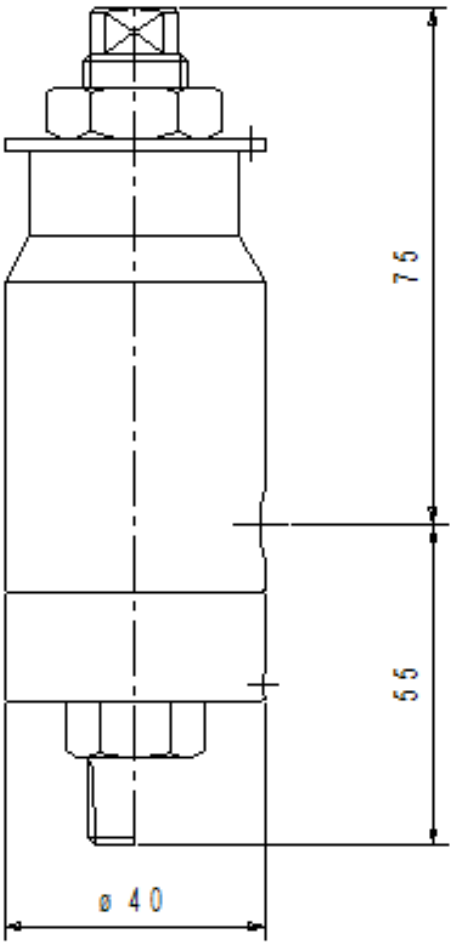

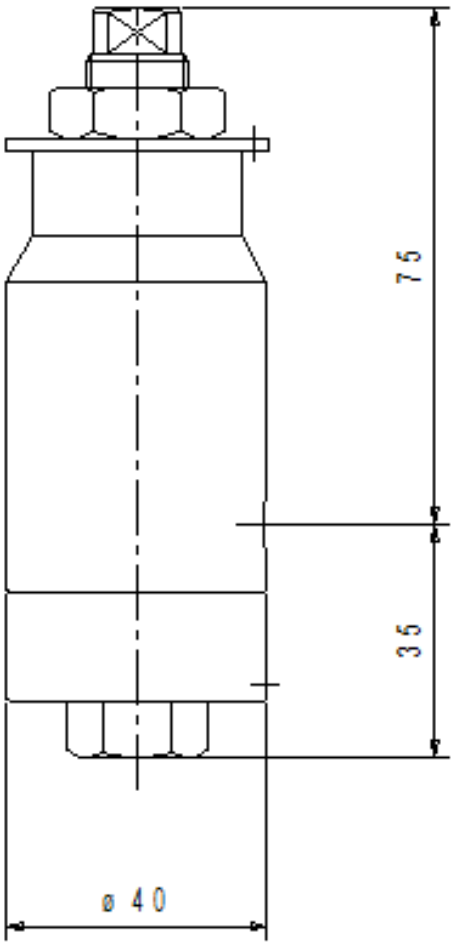

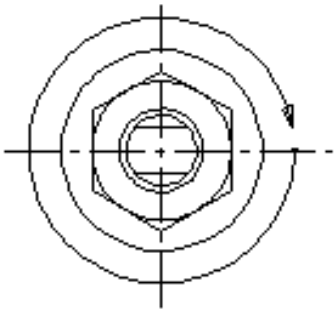

USCITA ORIENTABILE 360°

Model	***Connections***		***Orifice***	***Set pressure***
	Inlet	***Outlet***	*mm / cmq*	*max.*
SV 10001 - 1/4"- M	*1/4" NPT-M*	*1/4" NPT-F*	*Ø 5 / 0,2*	*800 bar*
SV 10001 - 1/4"- F	*1/4" NPT-F*	*1/4" NPT-F*	*Ø 5 / 0,2*	*800 bar*

We reserve to modify our production without previous communication.

SV 10001 SERIES SAFETY VALVE

*The safety valve **SV 10001 Series** are particularly indicated to protect the injection pump from overpressure caused by improper handling or malfunctioning. They can be used with various fluids at high and extremely high pressure, up to 800 bar.*

1. INSTALLING

Before installing the valve on the plant make sure that:

- *the line fluid is indicated on the construction declaration or is compatible with what stated in it;*
- *the inlet piping the valve are impurities less, slag etc. and eventually remove them.*
- *the inlet and discharge piping are dimensioned in such a way that they generate the minimum possible loss of pressure.*

Once the valve has been installed on the plant make sure that:

- *the discharge is not positioned in such a way to result dangerous for people or for instruments;*
- *the discharge is properly conveyed .*

1.1 SETTING UP

Before shipment all the safety valves are hydrostatically tested and set at the setting pressure required by the Client. Therefore regulation in loco should not be necessary.
The maximum setting error is less than 3% for pressure up to 21 bar, with a minimum of 0,2 bar; it is less than 0,7 bar up to 70 bar; it is less than 1% for pressure over 70 bar.
In case it should be necessary to modify the set pressure of the valve proceed as follows:

1.1.1 setting regulation (referring to drawing)

In order to carry out setting regulation of the valve it is necessary:

- *loosen the lock nut (9);*
- *turn the adjusting screw (8) clockwise in case the set pressure should be increased;*
- *turn the adjusting screw (8) counter clockwise in case the pressure should be decreased.*

The adjustment range of the spring setting is ± 5% of the set pressure indicated on the label of the valve.
Once the valve setting is regulated tighten the lock nut (9).

2. DISASSEMBLING

In order to execute disassembling carry out progressively the following operations:

CAUTION : ***before disassembling the valve make sure that the plant on which it is mounted is not "under pressure" and that no pressure inside the valve itself has remained.***

- *remove the valve from the plant;*
- *loosen the lock nut (9) and the adjusting screw (8);*

CAUTION : ***before disassembling the nozzle of the valve body make sure that the spring (10) is totally released using the adjusting screw (8).***

- *overturn the valve and remove the ring nut (2);*
- *maintaining the nozzle (1) in contact with the body (7), overturn again the valve;*
- *remove the body and all the internal parts.*

3. ASSEMBLING

*For assembling carry out the same operations of point **2)** but in reverse order.*

4. MAINTENANCE (enclosure A)

*The safety valves requires an ordinary but careful maintenance **(SEE MAINTENANCE PLANT)** and in case it should be necessary , follow the operation stated in point **2)** for disassembling and in point **3)** for assembling.*
In case of seat damaging it is necessary to carry out a new lapping: this operation has to be executed by skilled workers.
*In case inconvenience should occur to the valve, verify if in the **DAMAGES TABLE** are contained some useful instructions for solving the problem.*
In case the inconvenience is of different nature from what stated in the table, contact our Service Dept.

WARNING

- ***The safety valves should not be subjected to bumps or such stresses that could compromise the working.***
- ***High loads on the spring can damage the valve.***
- ***The safety valves must be used only exclusively for the use stated in the construction declaration.***
- ***The safety valve must be revised within two years from installation independently on the number of interventions executed by the valve.***

We reserve to modify our production without previous communication.

ITEM	CODE	DESCRIPTION	MATERIAL CLASS		
			60	64	65
1	42-0010-XX	NOZZLE 1/4”NPT-M	AISI 316L	17-4PH	AISI 316L
	42-0011-XX	NOZZLE 1/4”NPT-F	AISI 316L	17-4PH	AISI 316L
2	63-0003-37	RING NUT	AISI 316L	AISI 316L	AISI 316L
3	02-0011-47	DISC	17-4PH	17-4PH	17-4PH
4	04-00001-33	GUIDE	AISI 303	AISI 303	AISI 303
5	12-0002-47	STEM	17-4PH	17-4PH	17-4PH
6	04-0002-37	SPRING GUIDE	AISI 316L	AISI 316L	AISI 316L
7	07-0003-37	BODY	AISI 316L	AISI 316L	AISI 316L
8	06-0032-37	ADJUSTING SCREW	AISI 316L	AISI 316L	AISI 316L
9	16-0008-34	LOCK NUT	AISI 316L	AISI 316L	AISI 316L
10	TABLE	SPRING	ALLOY STEEL / AISI 316		
11	85-0058-XX	O-RING 2075	FPM RUBBER		RUBBER
12	85-0060-XX	O-RING 106	FPM RUBBER		RUBBER
13	85-0059-XX	O-RING 2087	FPM RUBBER		RUBBER
14	02-0010-42	BALL	AISI 420	AISI 420	AISI 420

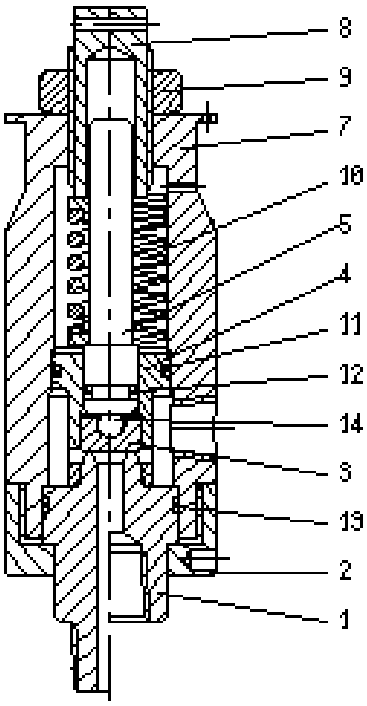

* RECOMMENDED SPARE RARTS

SET PRESSURE RANGE	SPRING CODE	VALVE CODE	
		M x F	F x F
610 - 810 bar	50-0001-00	101-002-XX	101-004-XX
460 - 620 bar	50-0002-00		
350 - 470 bar	50-0003-00		
260 - 360 bar	50-0004-00		
190 - 280 bar	50-0005-00		
140 - 205 bar	50-0006-00		
100 - 150 bar	50-0007-00		
75 - 99 bar	50-0008-00		
60 - 75 bar	50-0009-00		
46 - 60 bar	50-0010-00		
35 - 46 bar	50-0011-00		
25 - 35 bar	13-0019-36	101-001-XX	101-003-XX
18 - 25 bar	13-0023-36		
13 - 18 bar	13-0022-36		
9 - 13 bar	13-0018-36		

XX= see material class

We reserve to modify our production without previous communication.

ORDINARY MAINTENANCE PLAN	
Check of the seat and disc on the plant	*Every valve opening or every 6-month working.*
Check of the seal outwards in case of back pressure on the plant.	*Every 30 days.*
Ordinary maintenance of the valve assembled on the plant, including the seal check and surface check of the movable components.	*Every 12-month working.*
General maintenance of the valve removed from the plant including the disassembling, the seat and the disc check, the possible seat and disc lapping, gaskets substitution, painting restoration and inspection on the test bench.	*Every opening with seats damaging or every 24-month working.*

DAMAGES TABLE		
INCONVENIENT	***POSSIBLE DAMAGE***	***ACTION TO BE CARRIED OUT***
Fluid leakage in-line	*Seat wear and tear*	*Nozzle substitution or revision*
	Disc wear and tear	*Disc substitution or revision*
	Seat and disc damaging	*Nozzle and disc revision*
	Impurities presence between seat and disc	*Nozzle and disc cleaning and revision*
	Valve-use with fluid different from the one stated in the purchase order	*Nozzle and disc revision*
External back pressure fluid leakage.	*Valve gaskets damaging*	*Gaskets substitution*
	Valve body-bonnet damaging	*Valve revision or substitution*
	Cap or blowdown screw loosen	*Check and setting-up of the cap and of the blowdown screw.*
Opening at pressure value different form setting valve	*Back pressure changeable*	*Check of dimensioning and of the discharge piping working conditions and possible valve substitution with another type.*
	Spring release	*Spring substitution and check compatibility of the material with the fluid.*
	Setting screw withdraw	*Resetting the valve and tighten very well the lock nut*
Valve intervention with quick opening and re-closures repeated in the time	*Strong loss load in the inlet piping*	*Check the inlet piping length*
	Not correct setting-up of the blowdown ring	*Withdraw the blowdown ring until obtain a proper working, basing the first regulation one table 1; for liquid fluids withdraw the blowdown ring completely.*
	Pulsating flow rate to be discharged	*Check plant regulation.*
	Overdimensioned valve	*Substitute the valve with one correctly dimensioned.*

We reserve to modify our production without previous communication.